REV	BY	DATE	DESCRIPTION
-	PW	16.06.2017	New Vault, nothing changed, old rev.D

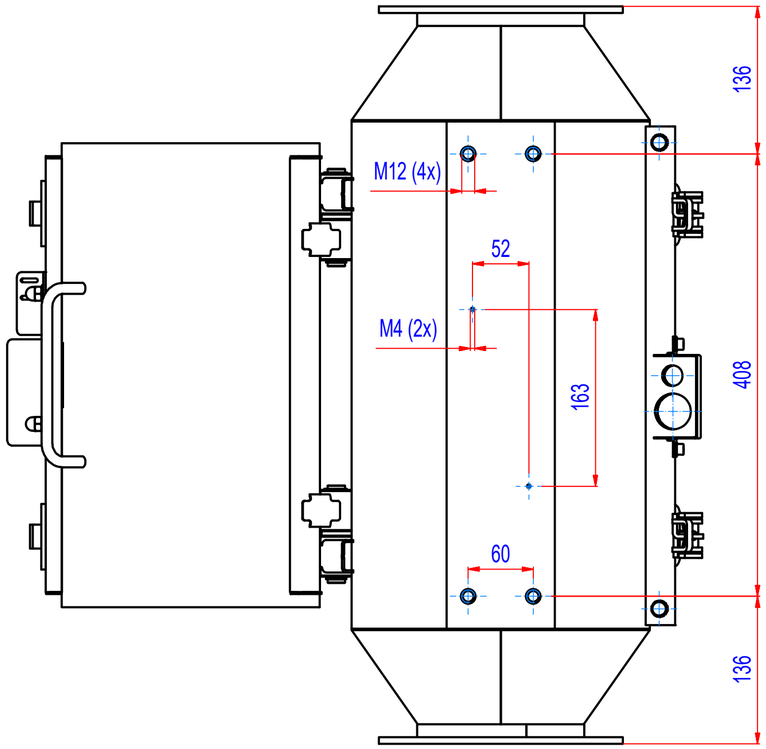

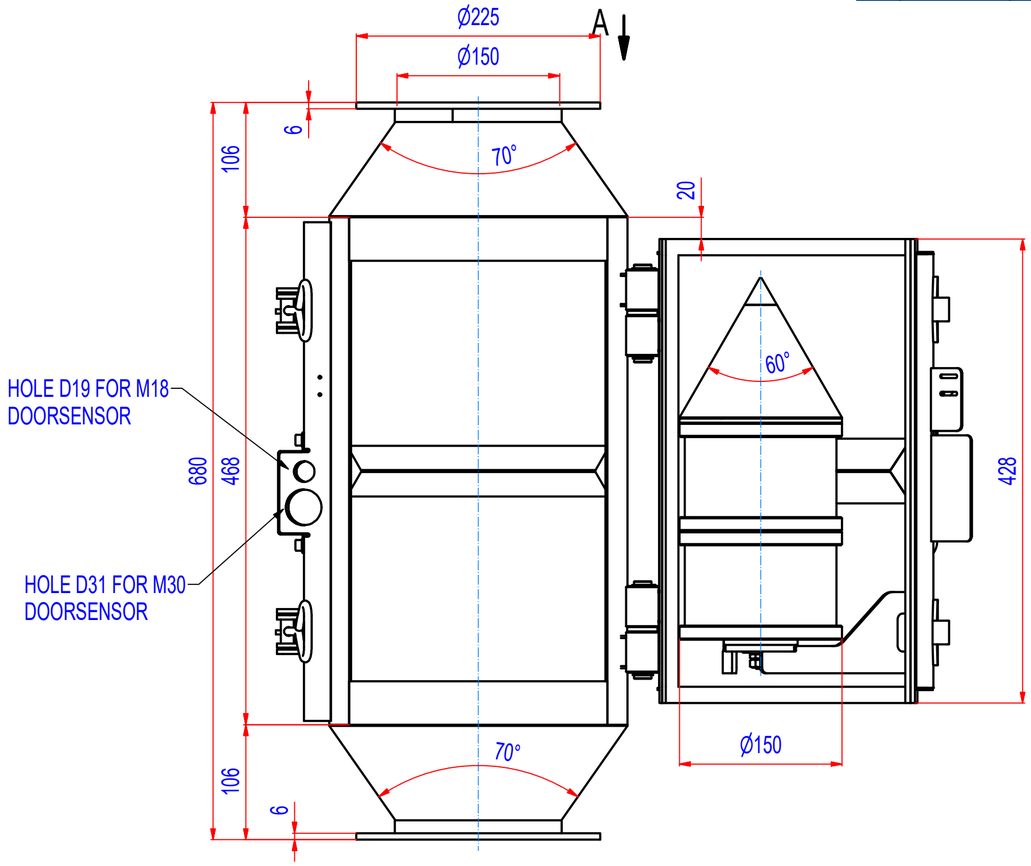

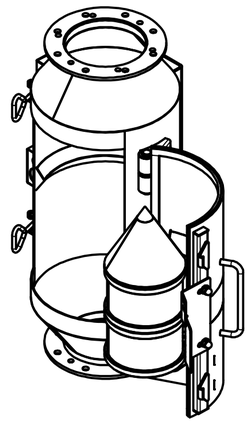

A(1:4)

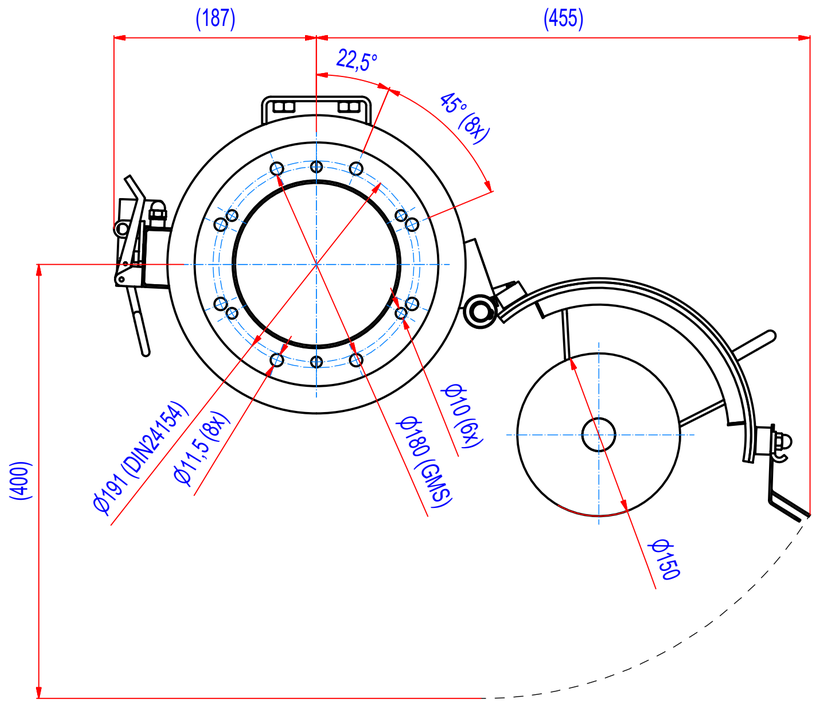

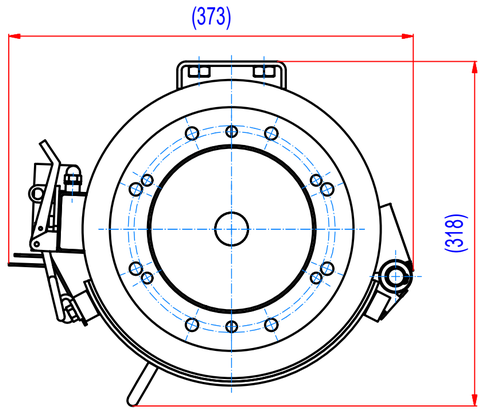

POZ./POS.	Č. SOUČÁSTI/ PART NUMBER	POPIS / DESCRIPTION	HMOT./ WEIGHT
1	A038_000000	SPPE000161	38,7

	Sheet: A2	Extra info:	General tolerance: ISO 2768-cL
Drawn: PW	Weight (kg): 38,7		Drawn according: ISO268; ISO1101; ISO2553
Date: 16.06.2017		GOUDSMIT MAGNETIC SYSTEMS	Status:
Predecessor:			Customer reference number:
Quick search: XSPP PM1		® All rights reserved. Reproduction is not permitted without written permission of GOUDSMIT Magnetic Systems BV	Product key: SPP-1-TC-FO-S4-B-BB
Description: Pipe magnet, Ferrite, PM1, type E			Part number: SPPE000161 Rev: -