DOC.NR.	REV	DATE	BY	DESCRIPTION
E0119087	-	2-10-2019	PV	ORIGINAL DRAWING

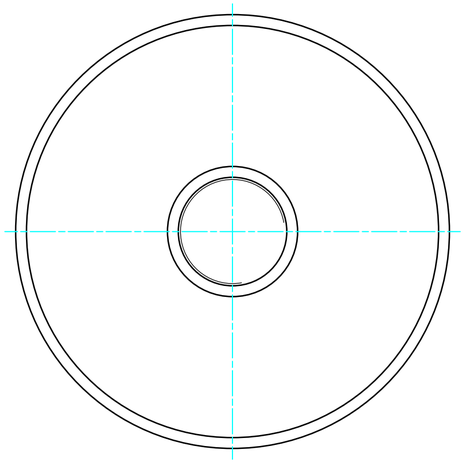

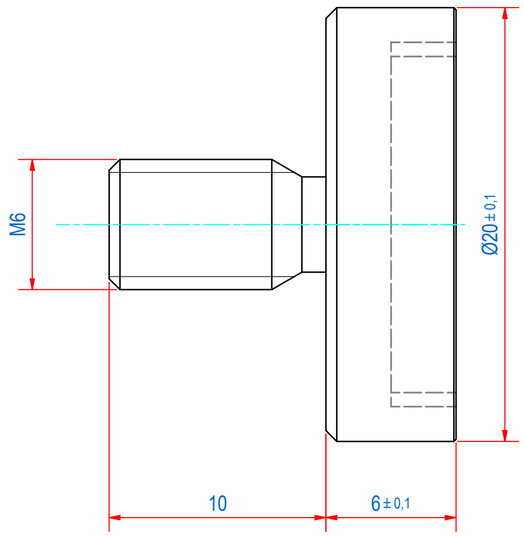

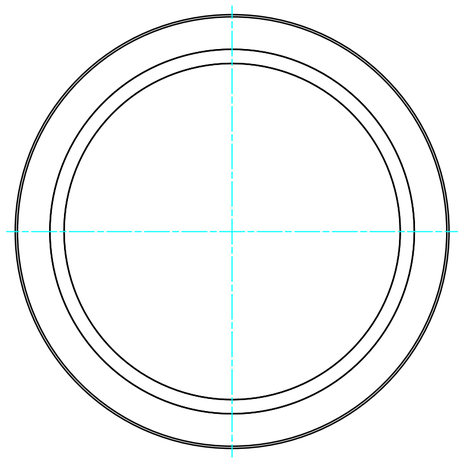

SURFACE TREATMENT: ZINC PLATED

RAW MAT.	Quantity	Material Number	Material Description	Length (mm)	Width (mm)
	1				

	Sheet: A2	Extra info: POTMAGNET NEODYMIUM	General tolerance: ISO 2768- mK
Drawn: PV	Weight (kg): 0,016		Drawn according: ISO268; ISO1101; ISO2553
Date: 17-7-2019		GOUDSMIT MAGNETICS	Status: Released
Spare part: False	Source:		Customer reference number:
Quick search: POTGM		® All rights reserved. Reproduction is not permitted without written permission of GOUDSMIT Magnetic Systems BV	Document number: E0119087 Doc.Rev: -
Description: PM-TE-N-SG-D20x6xM6x10			Part number: GM17625 Rev: -