Slides DZ 2907, Width 9.6 mm, to 55 kg, Over Extension

Material:
Slide elements: Cold-rolled steel, bright zinc-plated.
Ball retainers: Plastic / zinc-plated steel.
Balls: Hardened steel.

Telescopic ball bearing slides for applications in the industrial and electronics sector.
- Locks in open position.
- Fast disconnection.
- Bracket mount for electrical cabinets on request.
- Mounting accessories included.
- Service life 10,000 cycles.
- Temperature range: -20°C to +70°C.

Ordering details: e.g.: Prod. No. 649 022 12, Slides DZ 2907

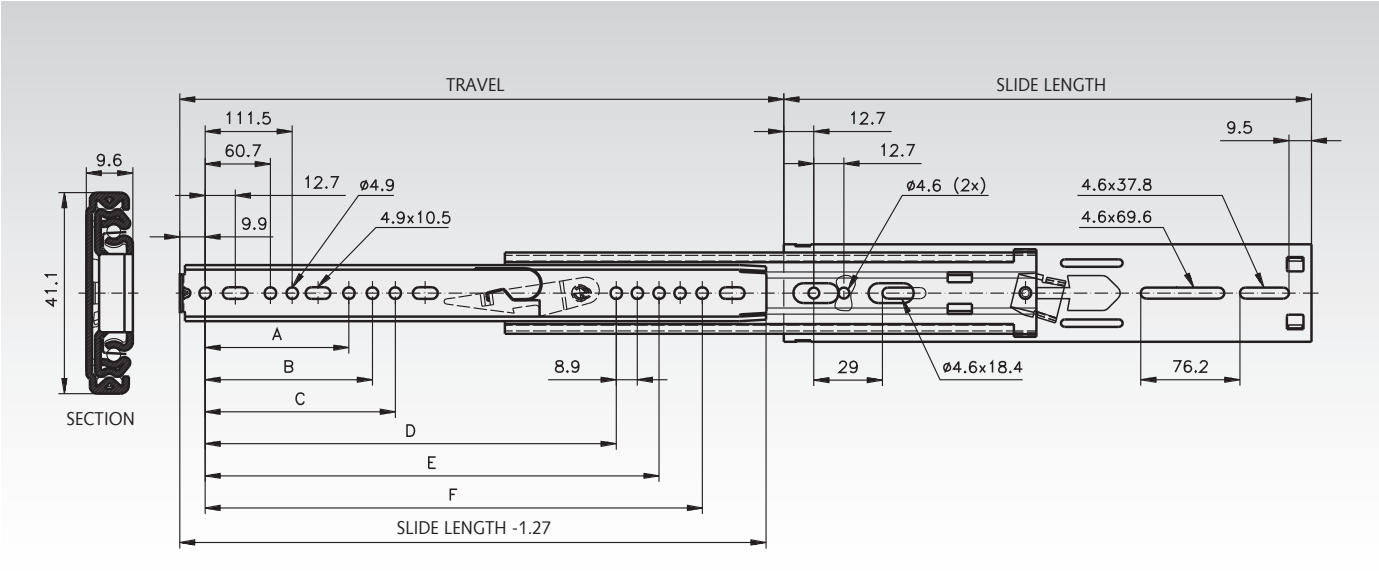

Product No. per Pair	Slide Length mm	Travel +/-3.2 mm	A mm	B mm	C mm	D mm	E mm	F mm	Load Rating per Pair kg	Weight per Pair kg
649 022 12	305	356	-	-	-	-	-	235,0	30	0,84
649 022 14	356	406	-	-	-	-	-	285,8	35	1,00
649 022 16	406	457	162,6	-	-	-	-	336,5	45	1,13
649 022 18	457	508	-	-	164,8	314,3	-	387,3	50	1,27
649 022 20	508	559	-	172,1	203,2	356,2	-	438,1	55	1,42
649 022 22	559	610	-	-	213,0	407,0	-	488,9	55	1,55
649 022 24	610	660	254,0	273,7	-	-	457,8	539,7	50	1,71
649 022 26	660	711	140,3	232,4	269,1	416,6	508,6	590,5	50	1,87
649 022 28	711	762	191,1	283,2	304,8	467,4	559,4	641,4	50	2,00
649 022 30	762	813	-	241,9	319,9	518,2	610,2	692,1	50	2,16

Note

Recommended mounts: M4 screw.
Use all mounting positions to achieve the max. load rating.